REVISION S

DO NOT SCALE FROM THIS PRINT

SIB-1XX-XX-XX-S-XX-XX

No OF POSITIONS
-02 THRU -30
(PER ROW)

LEAD STYLE
-02: SURFACE MOUNT
(USE C-228-X)

PLATING SPECIFICATION
-F: LIGHT SELECTIVE
(USE C-228-F)
-FM: FLASH SELECTIVE, PURE TIN, MATTE FINISH
(USE C-228-FM)

ROW SPECIFICATION
-S: SINGLE (USE SIBM-XX-02-S)

OPTION
-LC: LOCKING CLIPS
(USE LC-09-TM)
[N/A WITH THREADED INSERT OPTION -E, -M OR -TI]

THREADED INSERT OPTION
[NOT AVAILABLE ON 30 POS]
* -E: TI-2-56-115 (ENGLISH)
* -M: TI-M2-4-115-N (METRIC)
(SEE FIG. 2, SHEET 2)
* -TI: NO INSERTS PLACED IN BODY
(SEE TABLE 1 ON SHEET 2 FOR -TI POSITIONAL OFFERINGS)

* AVAILABLE TO EXISTING CUSTOMERS ONLY

C5

$.0033^{+.0040}_{-.0020}$ [$0.084^{+0.102}_{-0.051}$]
(SEE NOTES 9 & 10)

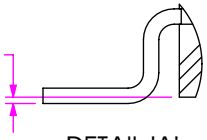

DETAIL 'A'
SCALE 10 : 1

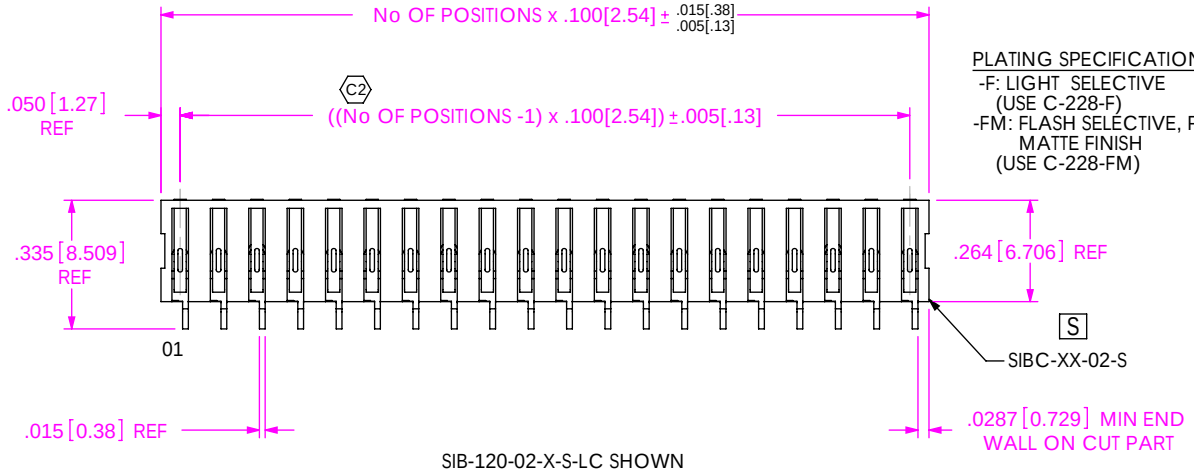

SIB-120-02-X-S-LC SHOWN

FIG. 1

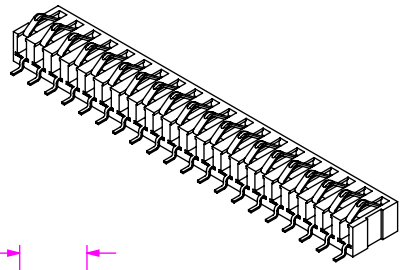

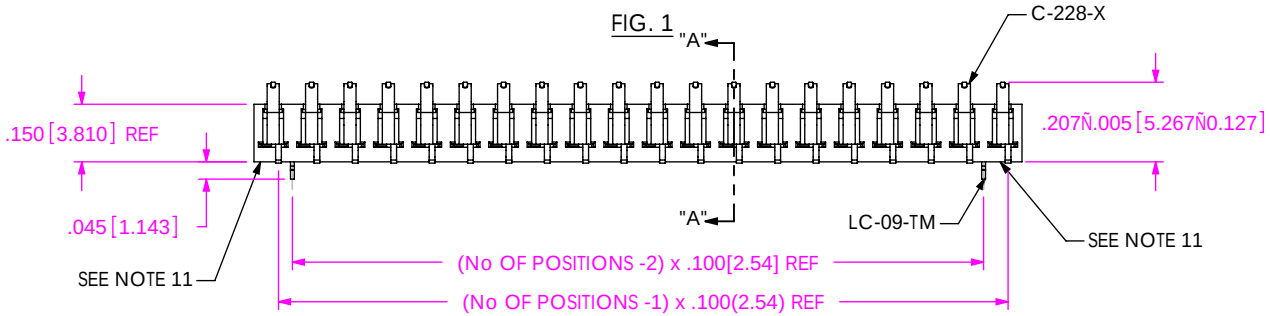

C3

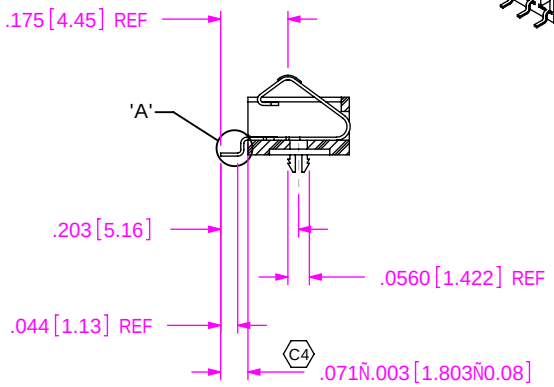

SECTION "A"-"A"

TABLE 2: COPLANARITY	
POSITIONS	"A"
-02 THRU -19	.004[.10]
-20 THRU -30	.006[.15]

NOTES:

1. Ⓒ REPRESENTS A CRITICAL DIMENSION.
2. COPLANARITY: SEE TABLE 2. (C1)
3. BURR ALLOWANCE: .0015[.038] MAX.
4. MAXIMUM CUT FLASH: .010[.3], CAN NOT EXTEND PAST TAIL.
5. MINIMUM PUSHOUT FORCE: 1 LB.
6. MAXIMUM ALLOWABLE BOW: .004[.10] INCH/INCH AFTER ASSEMBLY.
7. THREADED INSERT MUST HANDLE 25 IN-OZ OF TORQUE WITHOUT ROTATING OR LOOSENING.
8. THREADED INSERT RETENTION: 10 LBS. MINIMUM.
9. MAX VARATION FROM PIN TO PIN TO BE .002.
10. MEASURED ON UNCUT PARTS.
11. END FEET CAN BE NO MORE THAN .002 BELOW BOTTOM OF TAILS.
12. (S) FINISHED GOOD WITH AND WITHOUT FEET IS ACCEPTABLE. SEE SHEET 3 FOR FINISHED GOOD WITH FEET.

UNLESS OTHERWISE SPECIFIED, DIMENSIONS ARE IN INCHES.
TOLERANCES ARE:
DECIMALS
.XX: ±.01 [.3]
.XXX: ±.005 [.13]
.XXXX: ±.0020 [.051]
ANGLES
2°

PROPRIETARY NOTE
THIS DOCUMENT CONTAINS INFORMATION CONFIDENTIAL AND PROPRIETARY TO SAMTEC, INC. AND SHALL NOT BE REPRODUCED OR TRANSFERRED TO OTHER DOCUMENTS OR DISCLOSED TO OTHERS OR USED FOR ANY PURPOSE OTHER THAN THAT WHICH IT WAS OBTAINED WITHOUT THE EXPRESSED WRITTEN CONSENT OF SAMTEC, INC.

samtec
520 PARK EAST BLVD, NEW ALBANY, IN 47150
PHONE: 812-944-6733 FAX: 812-948-5047
e-Mail: info@SAMTEC.com code: 55322

MATERIAL: DO NOT SCALE DRAWING SHEET SCALE: 2:1

INSULATOR: LCP, COLOR: BLACK
CONTACT: PHOSPHOR BRONZE

DESCRIPTION: .100 SINGLE INTERFACE BEAM ASSEMBLY

DWG. NO. SIB-1XX-XX-XX-S-XX-XX

BY: DEAN P 9/20/2000 SHEET 1 OF 3

F:\dwg\MISC\Mktg\SIB-1XX-XX-XX-S-XX-XX-MKT.SLDDRW

REVISION S

FIG. 2
SIB-120-02-X-S-E SHOWN

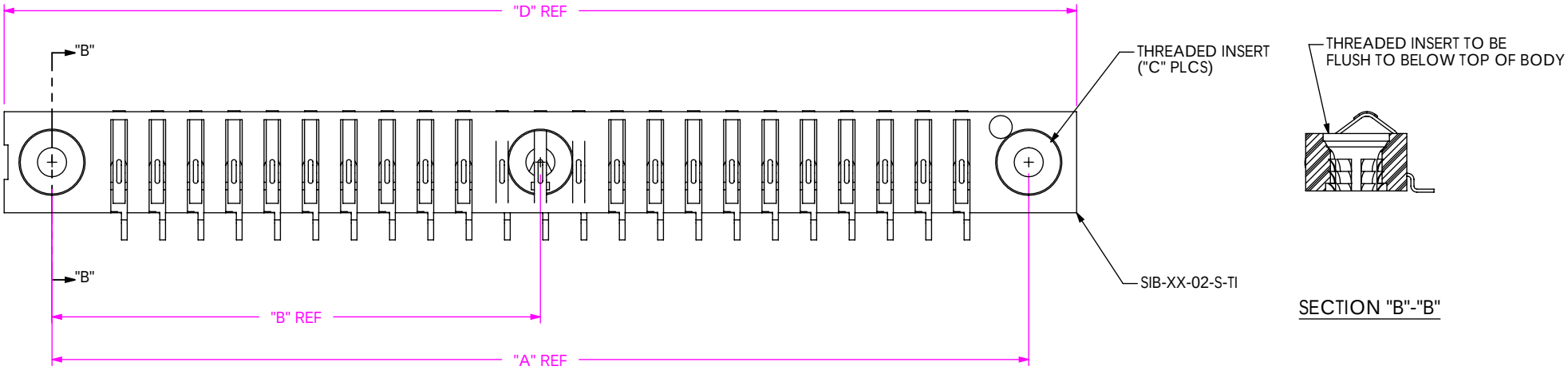

FIG. 3
SIB-120-02-X-S-TI SHOWN

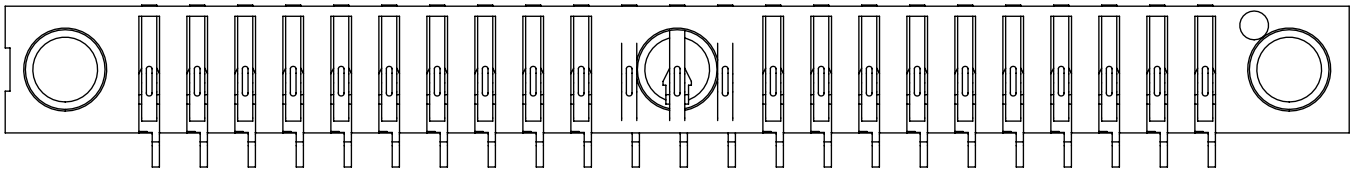

TABLE 1: THREADED INSERT OPTION				
POS	"A"	"B"	"C"	"D"
-05	.750[19.05]	N/A	2	1.000[25.40]
-10	1.250[31.75]	N/A	2	1.500[38.10]
-15	1.750[44.45]	N/A	2	2.000[50.80]
-20	2.550[64.77]	1.275[32.39]	3	2.800[71.12]
-25	3.050[77.47]	1.475[37.47]	3	3.300[83.82]

PACKAGING VIEW
(PARTS TO HAVE POSITION #1 LOADED IN SAME DIRECTION AS ARROW ON TUBE)

NO -LC OPTION

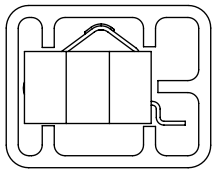

TUBE: PT-1-24-01-118
PLUG: TP-03

-LC OPTION

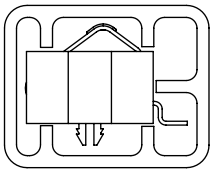

TUBE: PT-1-24-01-118
PLUG: TP-03

F:\dwg\MISC\Mktg\SIB-1XX-XX-XX-S-XX-XX-MKT.SLDDRW

PROPRIETARY NOTE
THIS DOCUMENT CONTAINS INFORMATION CONFIDENTIAL AND PROPRIETARY TO SAMTEC, INC. AND SHALL NOT BE REPRODUCED OR TRANSFERRED TO OTHER DOCUMENTS OR DISCLOSED TO OTHERS OR USED FOR ANY PURPOSE OTHER THAN THAT WHICH IT WAS OBTAINED WITHOUT THE EXPRESSED WRITTEN CONSENT OF SAMTEC, INC.

DO NOT SCALE DRAWING

SHEET SCALE: 2.5:1

samtec
520 PARK EAST BLVD, NEW ALBANY, IN 47150
PHONE: 812-944-6733 FAX: 812-948-5047
e-Mail: info@SAMTEC.com code: 55322

DESCRIPTION:
.100 SINGLE INTERFACE BEAM ASSEMBLY

DWG. NO.
SIB-1XX-XX-XX-S-XX-XX

BY: DEAN P 9/20/2000 SHEET 2 OF 3

REVISION S

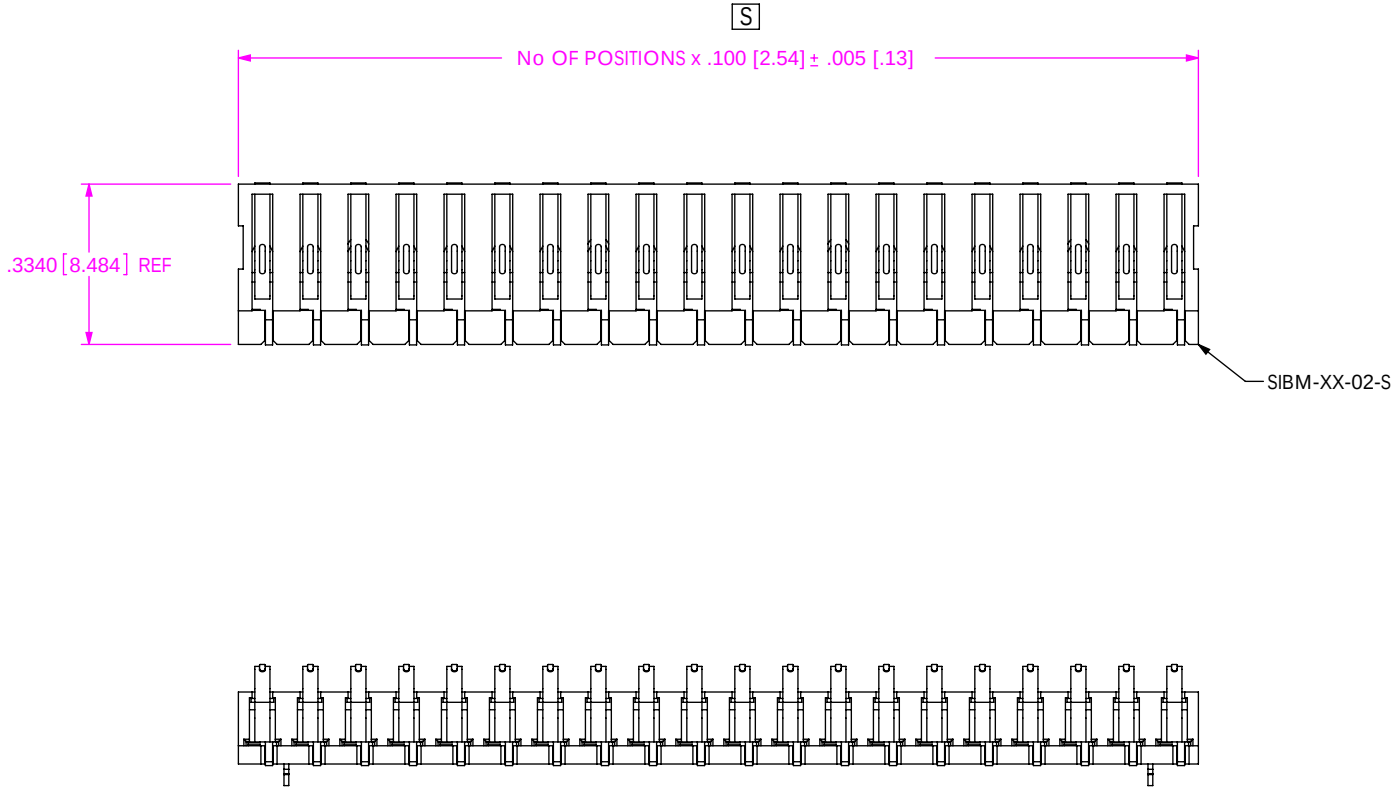

FIG. 3
SAME AS FIG1 EXCEPT AS SHOWN

PROPRIETARY NOTE
THIS DOCUMENT CONTAINS INFORMATION CONFIDENTIAL AND PROPRIETARY TO SAMTEC, INC. AND SHALL NOT BE REPRODUCED OR TRANSFERRED TO OTHER DOCUMENTS OR DISCLOSED TO OTHERS OR USED FOR ANY PURPOSE OTHER THAN THAT WHICH IT WAS OBTAINED WITHOUT THE EXPRESSED WRITTEN CONSENT OF SAMTEC, INC.

DO NOT SCALE DRAWING

SHEET SCALE: 2.5:1

samtec
520 PARK EAST BLVD, NEW ALBANY, IN 47150
PHONE: 812-944-6733 FAX: 812-948-5047
e-Mail: info@SAMTEC.com code: 55322

DESCRIPTION:
.100 SINGLE INTERFACE BEAM ASSEMBLY

DWG. NO.
SIB-1XX-XX-XX-S-XX-XX

BY: DEAN P 9/20/2000 SHEET 3 OF 3

F:\dwg\MISC\Mktg\SIB-1XX-XX-XX-S-XX-XX-MKT.SLDDRW